MALE END VIEW	FEMALE END VIEW
(LONG PIN) 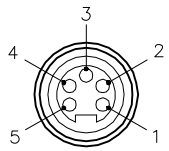	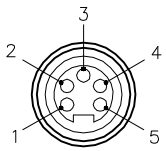
PAIRED #1 — 1 = BLUE, 2 = BROWN, 3 = GRN/YEL PAIRED #2 — 4 = WHITE, 5 = BLACK	PAIRED #1 — 1 = BLUE, 2 = BROWN, 3 = GRN/YEL PAIRED #2 — 4 = WHITE, 5 = BLACK

SPECIFICATIONS	
CONTACT CARRIER MATERIAL	TPU
MOLDED HEAD MATERIAL/COLOR	TPU/BLACK
CONTACT MATERIAL/PLATING	BRASS/GOLD
COUPLING NUT MATERIAL/FINISH	STAINLESS STEEL/PASSIVATED
RATED CURRENT [A]	8.0 A
RATED VOLTAGE [V]	600 V
OUTER JACKET MATERIAL/COLOR	PVC/BLACK
CONDUCTOR INSULATION MATERIAL	XLPE
NUMBER OF CONDUCTORS	5x18 AWG
CONDUCTOR ARRANGEMENT	2 SHIELDED TWISTED PAIR w/DRAIN, 1 GND, 1 OVR DRAIN
DRAIN/SHIELD	3x20 AWG DRAINS/FOIL (PAIRS), FOIL (OVERALL)
TEMPERATURE RATING	−40°C to +105°C (−40°F to +221°F)
PROTECTION CLASS	NEMA 1,3,4,4X,6P,12 & IECIP67,IP68,IP69,IP69K
CABLE RATINGS	UL: ITC−ER/PLTC−ER, Direct Burial, 105C CSA: CIC/TC, 90C, 600V C(UL) C22.2 No 245/1309 Marine Shipboard/IEEE 1580

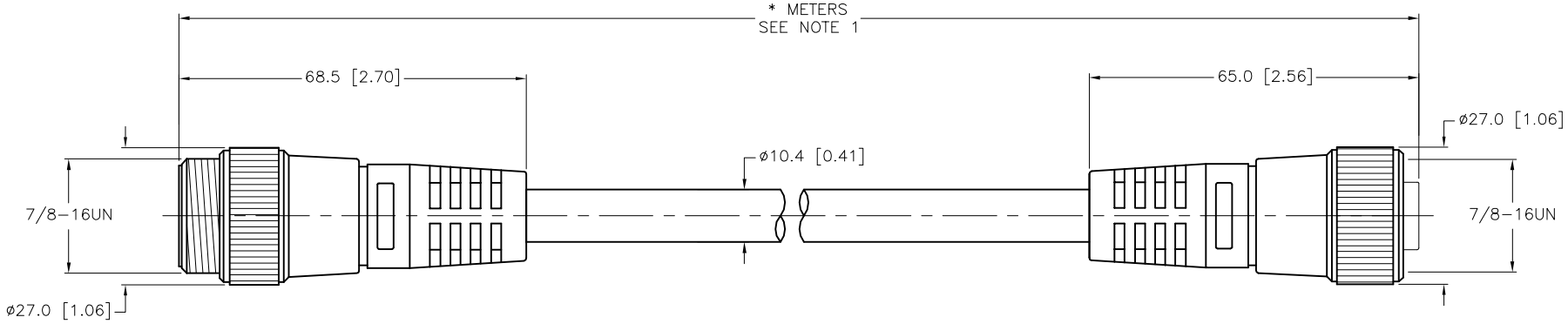

CABLE LENGTH	TOLERANCE *
ALL LENGTHS	+ 4% (OR 50mm) OF LENGTH − 0% (OR 0mm) OF LENGTH WHICHEVER IS GREATER
STRIP LENGTH	**TOLERANCE ***
0−7mm	±0.5mm
8−29mm	±1.0mm
30−49mm	±2.0mm
50−69mm	±3.0mm
70−100mm	±4.0mm
OVER 100mm	±5.0mm
* UNLESS OTHERWISE SPECIFIED	

NOTES:

1. "*" INDICATES CABLE LENGTH IN METERS. CONTACT TURCK TO ORDER SPECIFIC LENGTHS.

SOURCE DRAWING - FOR REFERENCE ONLY

REV	DESCRIPTION	BY	DATE	ECO NO.
F	UPDATE PROTECTION CLASS	CBM	04/13/21	76628

RELATED DOCUMENTS
1.
2.
3.
4.

3RD ANGLE PROJECTION

THIS DRAWING IS CONFIDENTIAL AND THE PROPERTY OF TURCK INC. USE OF THIS DOCUMENT WITHOUT WRITTEN PERMISSION IS PROHIBITED.

TURCK

3000 CAMPUS DRIVE
MINNEAPOLIS, MN 55441
1−800−544−7769
(763) 553−7300
(763) 553−0708 fax
www.turck.us

MATERIAL: SEE SPECIFICATIONS

FINISH: SEE SPECIFICATIONS

ALL DIMENSIONS DISPLAYED ON THIS DRAWING ARE FOR REFERENCE ONLY

CONTACT TURCK FOR MORE INFORMATION

DRFT: RDS | DATE: 10/15/13
APVD: C.K. | SCALE: 1=1.3

UNIT OF MEASUREMENT
MILLIMETER [INCH]
DO NOT SCALE THIS DRAWING

DESCRIPTION: P−RSV RKV 561−182−*M

IDENTIFICATION NO.

REV: F

FILE: 777032415

SHEET 1 OF 1